STAR WARS™ LEGION™

READ THIS FIRST

Be sure to use a pair of sharp hobby clippers to remove the miniature components from the frame. Carefully clean the excess material and mold lines with a sharp hobby knife. Check the fit of each part before gluing. Use a small amount of hobby plastic glue to assemble the components. Use caution with all products and follow all manufacturer instructions. Adult supervision is recommended for children under the age of 16. Have fun!

JOIN THE COMMUNITY

Use **#MyStarWarsLegion** to share your miniature photos and be a part of the *Star Wars™: Legion* community!

AtomicMassGames AtomicMassGames Atomic_Mass_Transmissions

A-A5 SPEEDER TRUCK INTERIOR

SWQ92 SUB-ASSEMBLY (A)

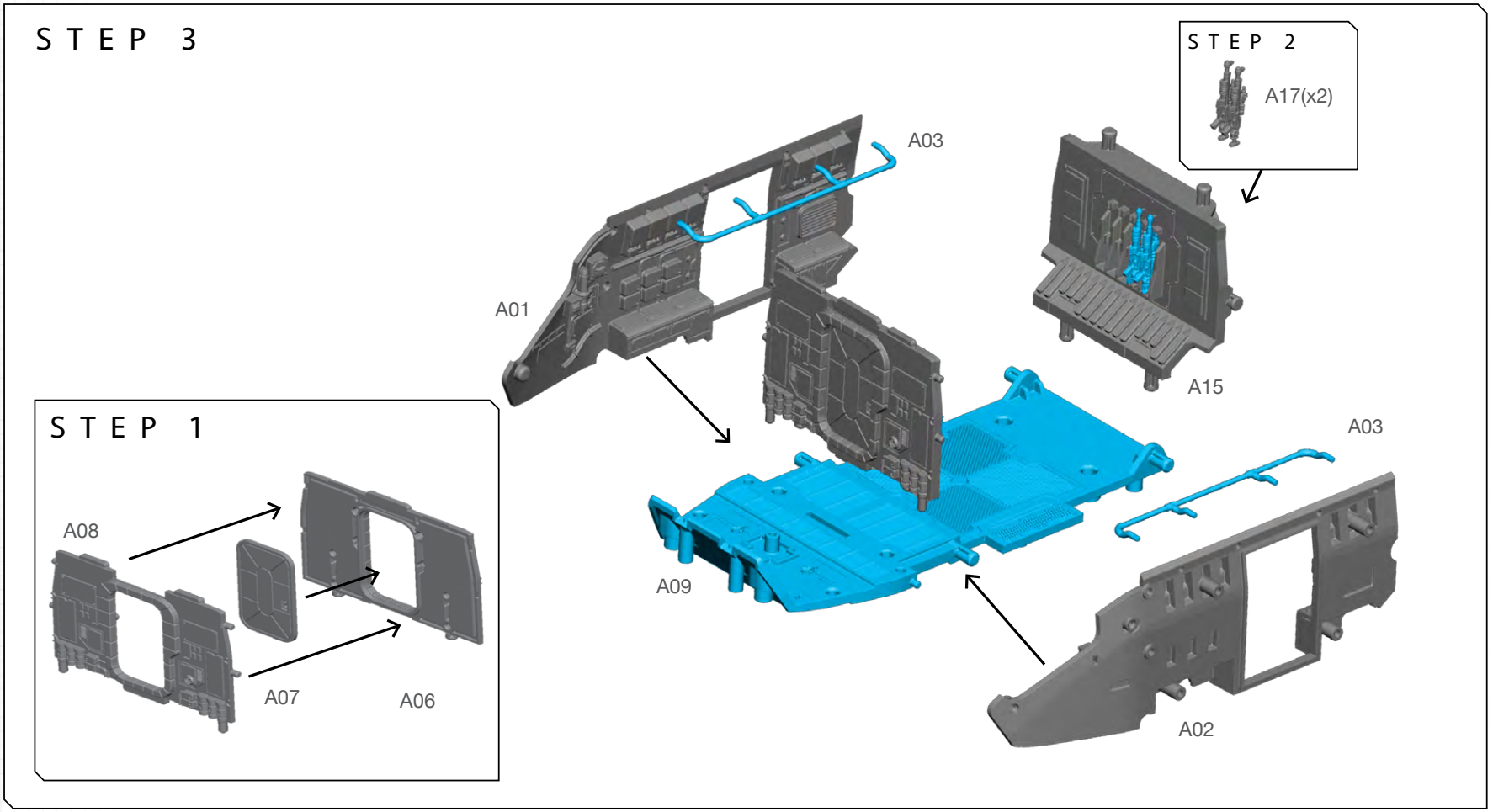

© LFL © AMG

ALL PARTS SHOULD BE ASSEMBLED USING PLASTIC GLUE. PERMISSION GRANTED TO PRINT OR PHOTOCOPY FOR PERSONAL USE.

VEHICLE INTERIOR (CONT)

SWQ92 SUB- ASSEMBLY (A)

VEHICLE THRUSTER

SWQ92 SUB-ASSEMBLY (A)

STEP 4

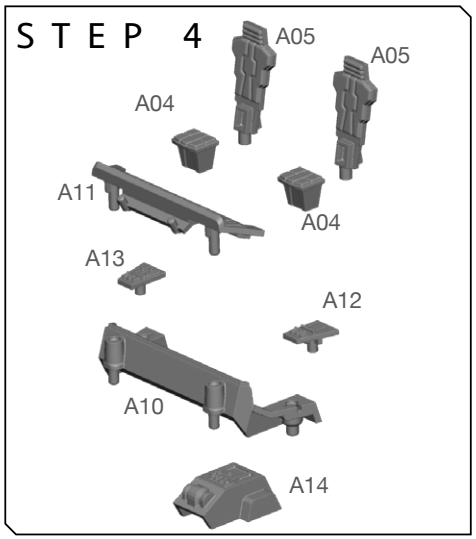

FINAL

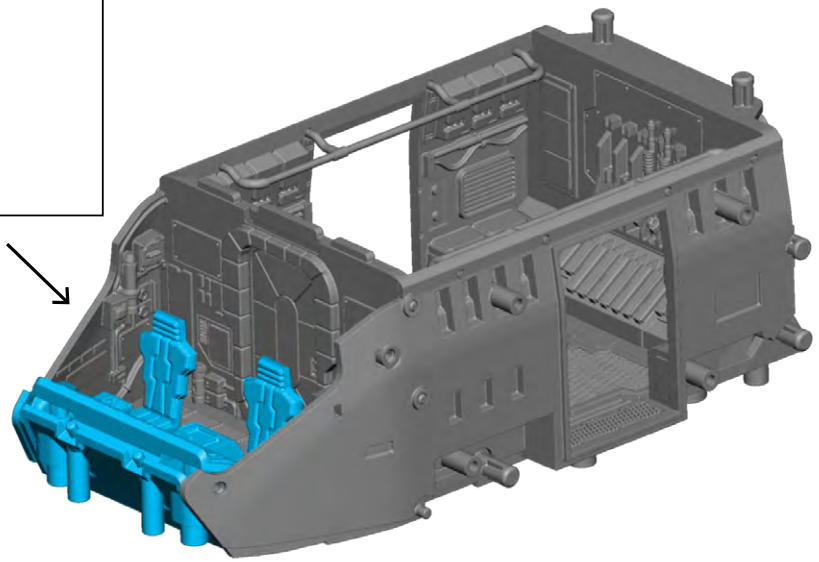

STEP 1

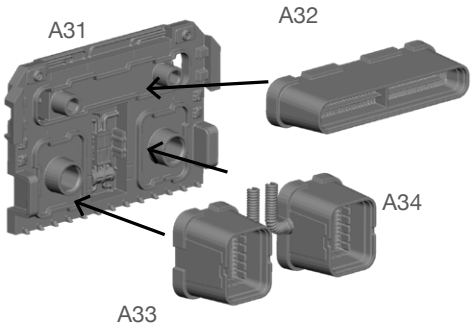

FINAL

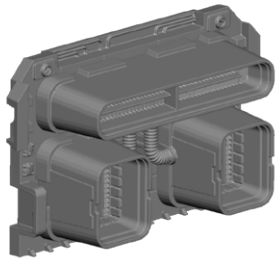

© LFL © AMG

ALL PARTS SHOULD BE ASSEMBLED USING PLASTIC GLUE. PERMISSION GRANTED TO PRINT OR PHOTOCOPY FOR PERSONAL USE.

VEHICLE SIDE PANELS

SWQ92 SUB-ASSEMBLY (A)

STEP 1

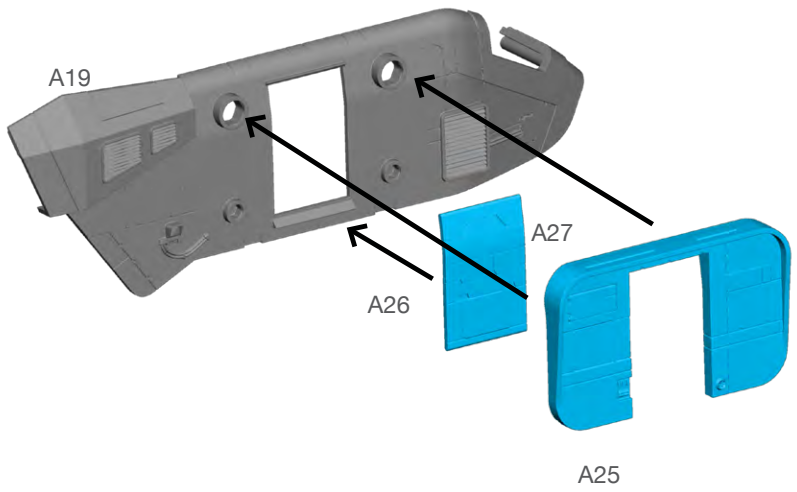

FINAL

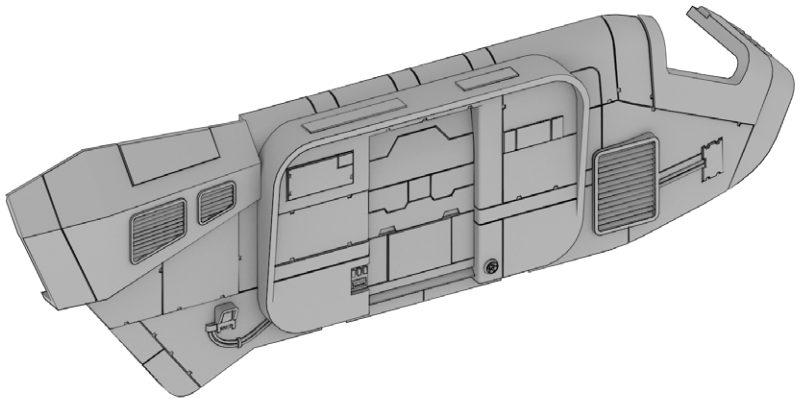

STEP 1

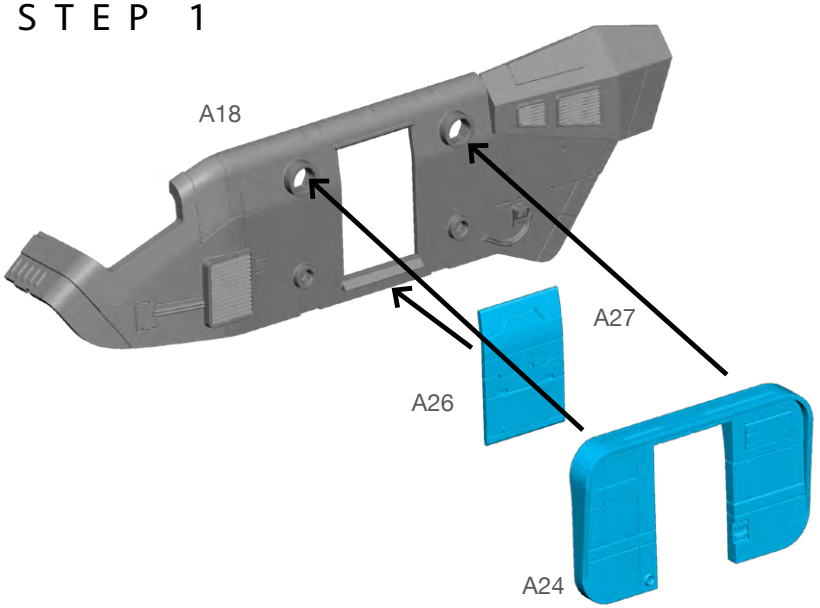

FINAL

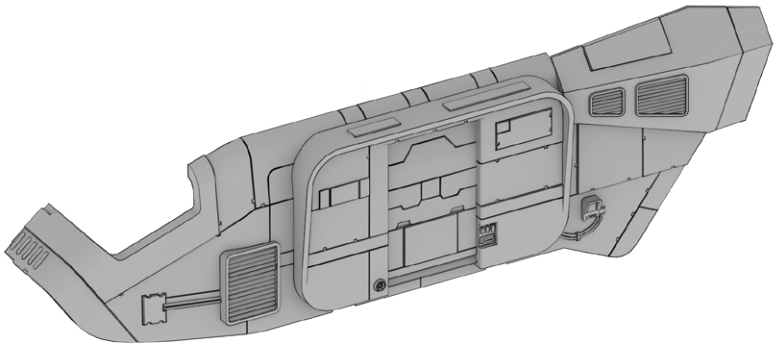

© LFL © AMG

ALL PARTS SHOULD BE ASSEMBLED USING PLASTIC GLUE. PERMISSION GRANTED TO PRINT OR PHOTOCOPY FOR PERSONAL USE.

VEHICLE UNDERCARRIAGE
SWQ92 SUB-ASSEMBLY (A)

STEP 1

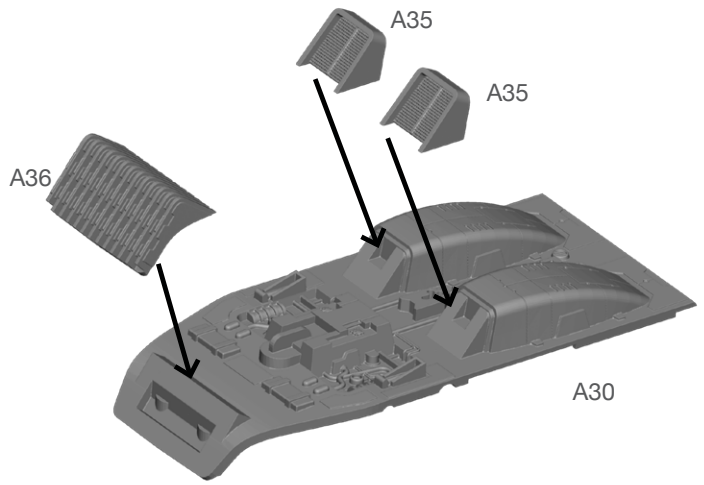

FINAL

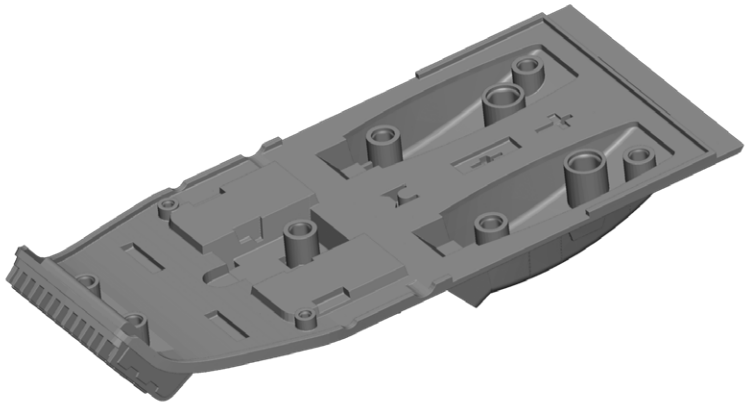

FLIP UPSIDE DOWN

VEHICLE ROOF
SWQ92 SUB-ASSEMBLY (A)

STEP 1

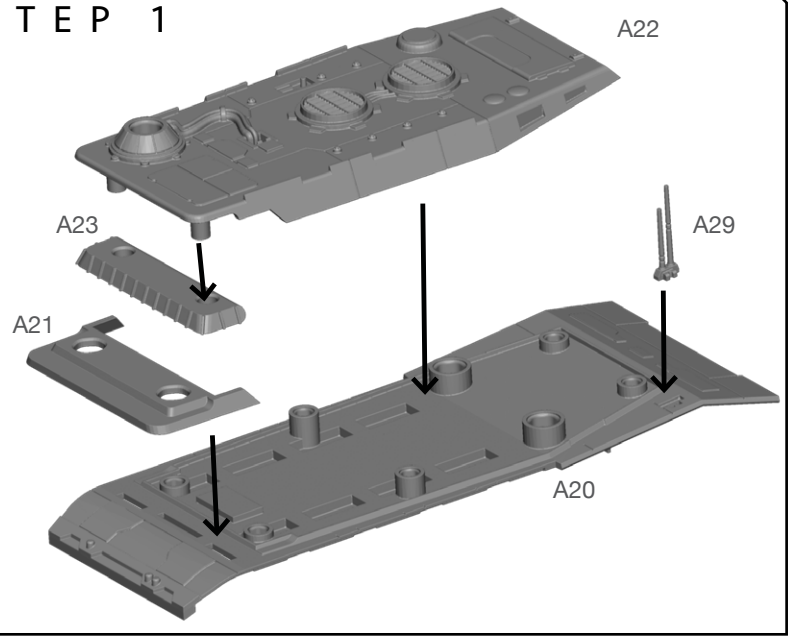

FINAL

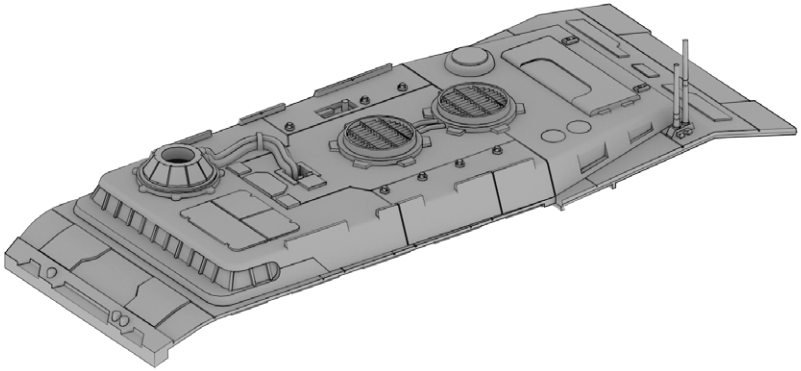

© LFL © AMG

ALL PARTS SHOULD BE ASSEMBLED USING PLASTIC GLUE. PERMISSION GRANTED TO PRINT OR PHOTOCOPY FOR PERSONAL USE.

A-A5 SPEEDER TRUCK

SWQ92 ASSEMBLY (A)

STEP 1

VEHICLE THRUSTER

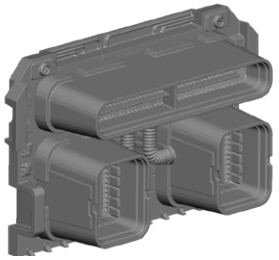

VEHICLE INTERIOR

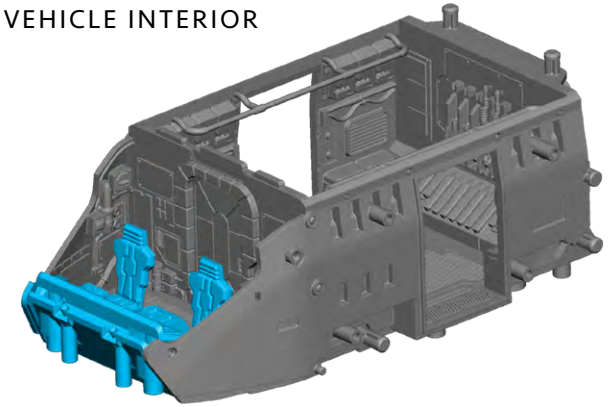

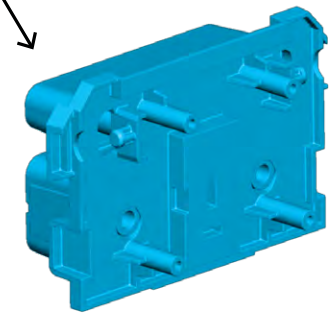

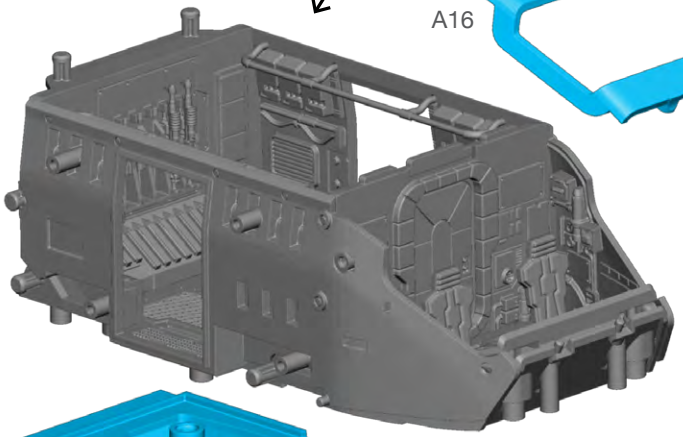

A16

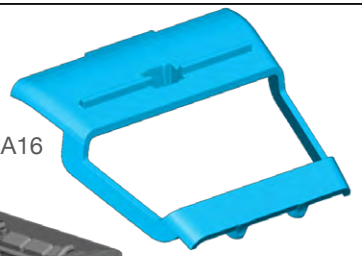

VEHICLE UNDERCARRIAGE

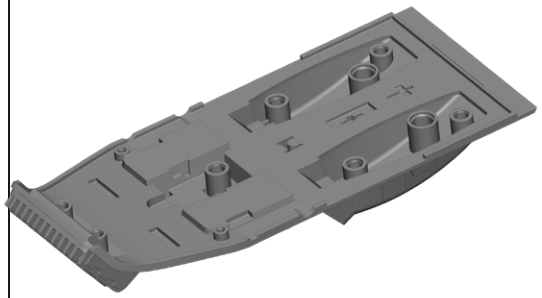

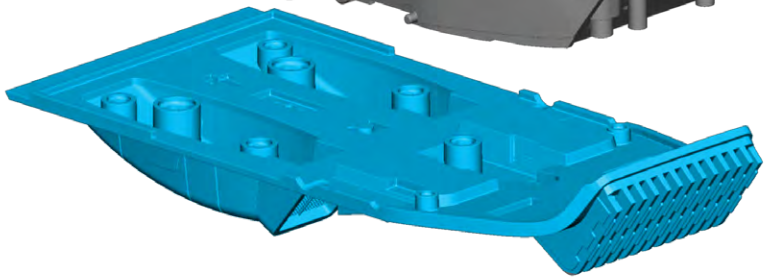

© LFL © AMG

ALL PARTS SHOULD BE ASSEMBLED USING PLASTIC GLUE. PERMISSION GRANTED TO PRINT OR PHOTOCOPY FOR PERSONAL USE.

A-A5 SPEEDER TRUCK (CONT)

SWQ92 ASSEMBLY (A)

STEP 2

VEHICLE ROOF

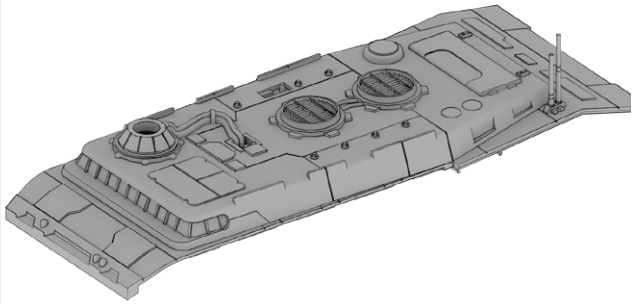

VEHICLE SIDE PANEL

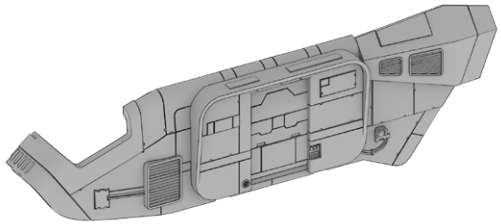

VEHICLE SIDE PANEL

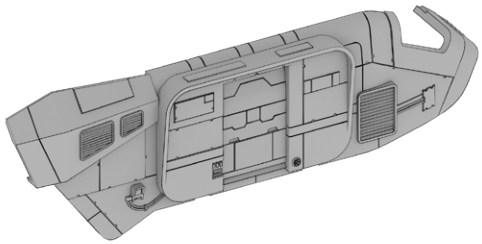

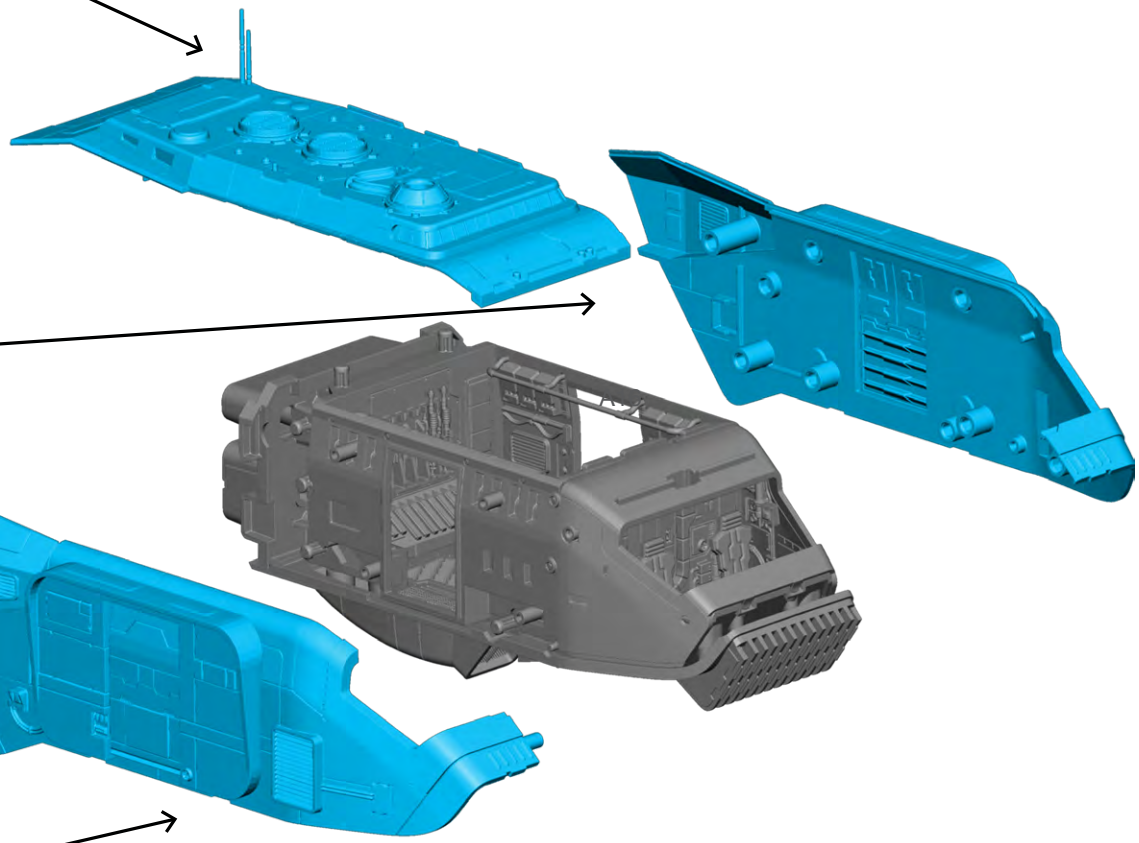

© LFL © AMG

ALL PARTS SHOULD BE ASSEMBLED USING PLASTIC GLUE. PERMISSION GRANTED TO PRINT OR PHOTOCOPY FOR PERSONAL USE.

A-A5 SPEEDER TRUCK (CONT)

SWQ92 ASSEMBLY (A)

FINAL

HEAVY LASER RETROFIT





ALTERNATE OPTION

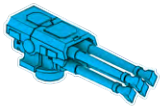

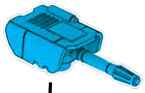

AG-2G QUAD LASER

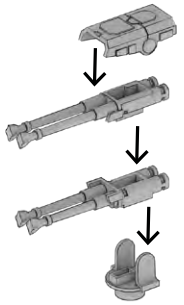

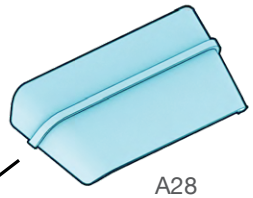

A-A5 SPEEDER TRUCK DRIVER (B)

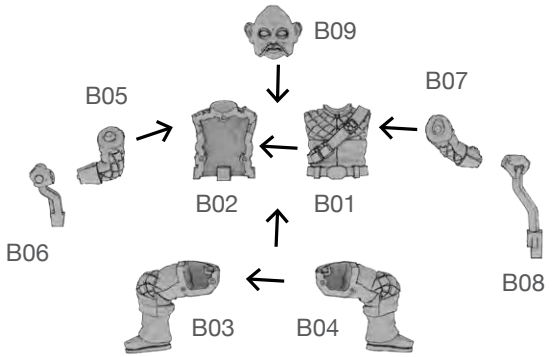

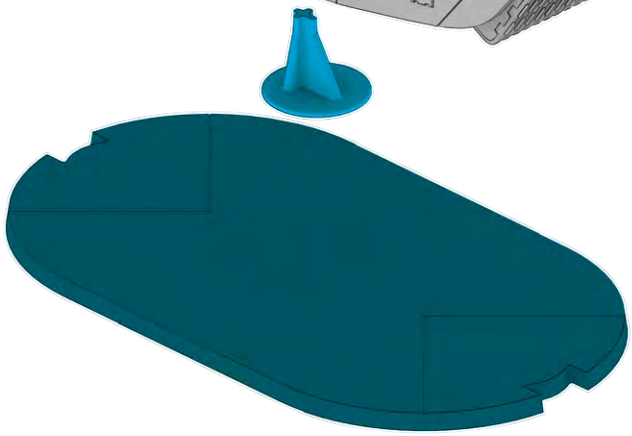

FINAL



© LFL © AMG

ALL PARTS SHOULD BE ASSEMBLED USING PLASTIC GLUE. PERMISSION GRANTED TO PRINT OR PHOTOCOPY FOR PERSONAL USE.